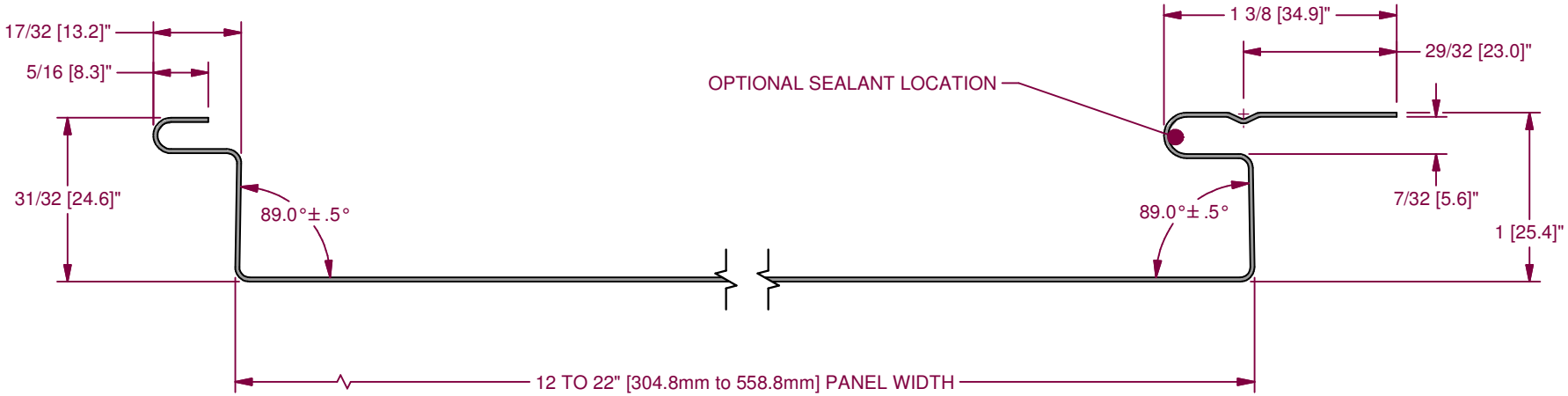

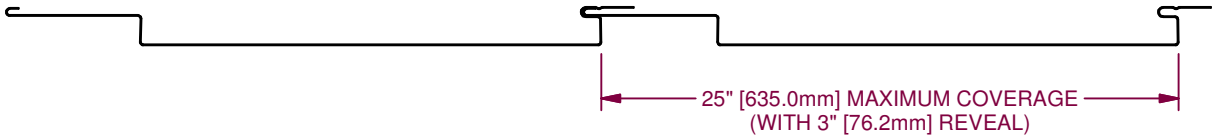

NOTES:
1. MATERIAL USAGE: 4" [100 mm]
2. WHEN USING PERFORATOR:
   MAXIMUM NET FREE AREA = 3.08 SQUARE INCHES PER 12 INCHES OF PERFORATION
   [1987 sq. mm / 304.8 mm]
3. MAXIMUM OF TWO PERFORATIONS PER PANEL.
4. DUAL DIMENSIONS: Inch [mm]

MATERIAL

FINISH: NONE

REVISION HISTORY

REV	ECR NO.	DATE	RELEASED BY
0	N/A	01/07/2013	JD

TOLERANCES
.XX = ± .01
.XXX = ± .005
FRACTION = ± 1/32"
ANGLE = ± 1/2°

NEW TECH MACHINERY CORP.

DRAWN BY: AJB
DATE: 11/30/12
CHECK BY: JD
DATE: 01/07/2013

PART NAME: 1" FLUSH WALL/SOFFIT PANEL

PART NUMBER: FWQ100 Profile

SHEET: 1 OF 1

REVISION: 0