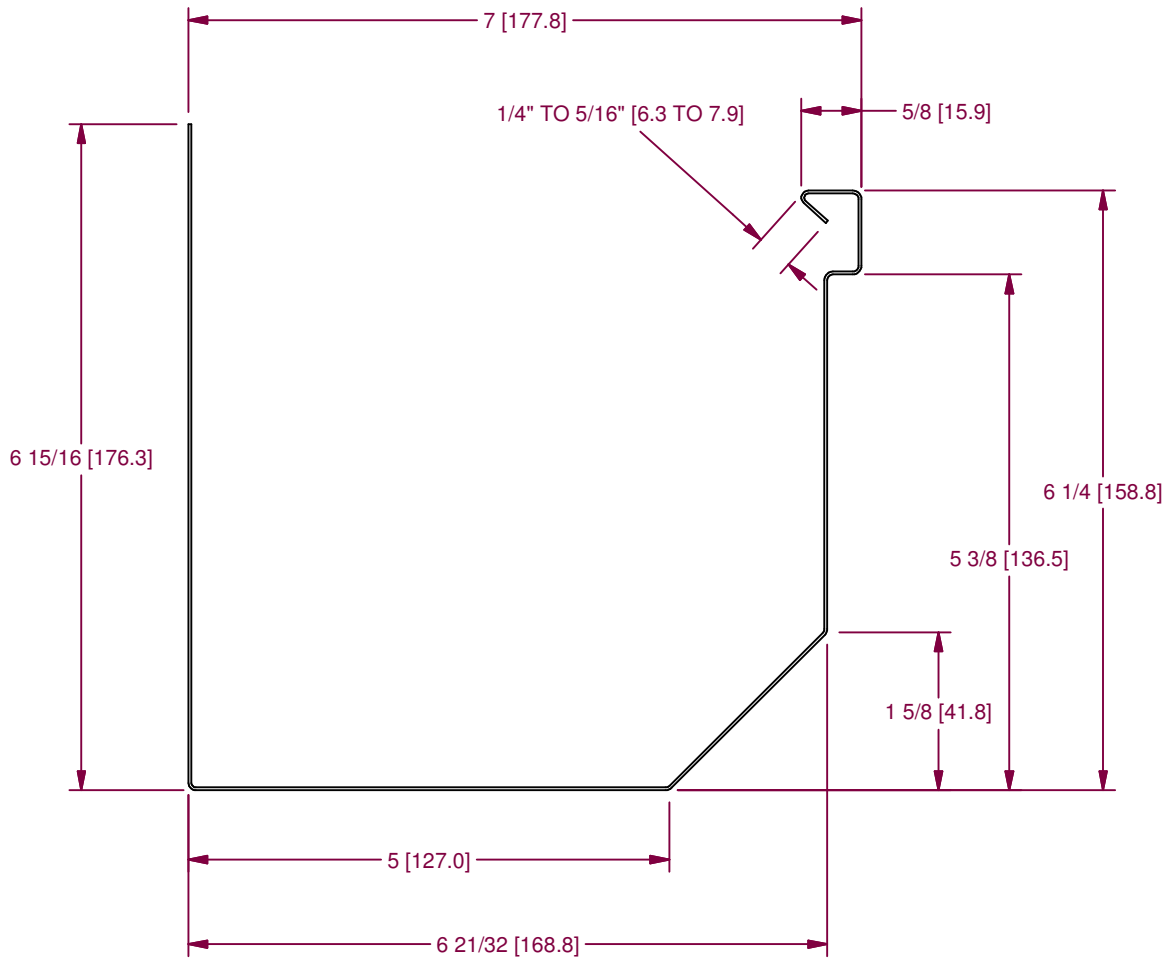

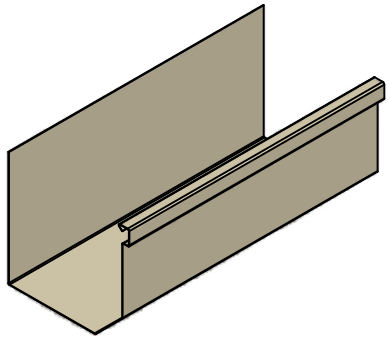

NOTE:
1. COIL WIDTH: 20" (508mm)
2. DUAL DIMENSIONS: Inch [mm]

MATERIAL	FINISH
PAINTED STEEL/PAINTED ALUMINUM/COPPER	NONE

REVISION HISTORY

REV	ECR NO.	DATE	RELEASED BY
0	ADDED mm	05/02/2012	JD

TOLERANCES
.XX = ± .01
.XXX = ± .005
FRACTION = ± 1/32"
ANGLE = ± 1/2°

NEW TECH MACHINERY CORP.

DRAWN BY: FRY	PART NAME: BG7 GUTTER WITH STRAIGHT BACK		
DATE: 09-19-2005			
CHECK BY: JD	PART NUMBER: BG7-SB7	SHEET: 1 OF 1	REVISION: 0
DATE: 05/02/2012			