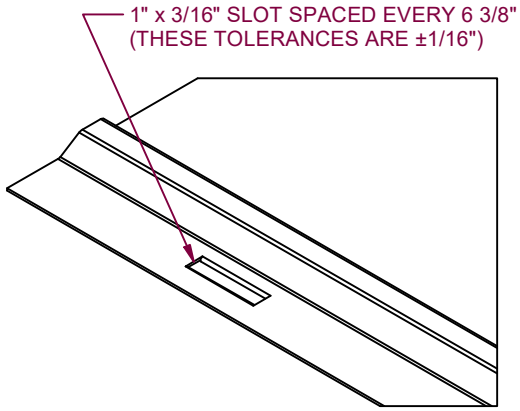

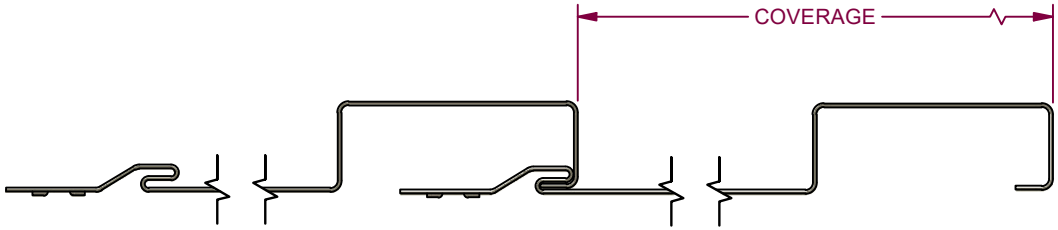

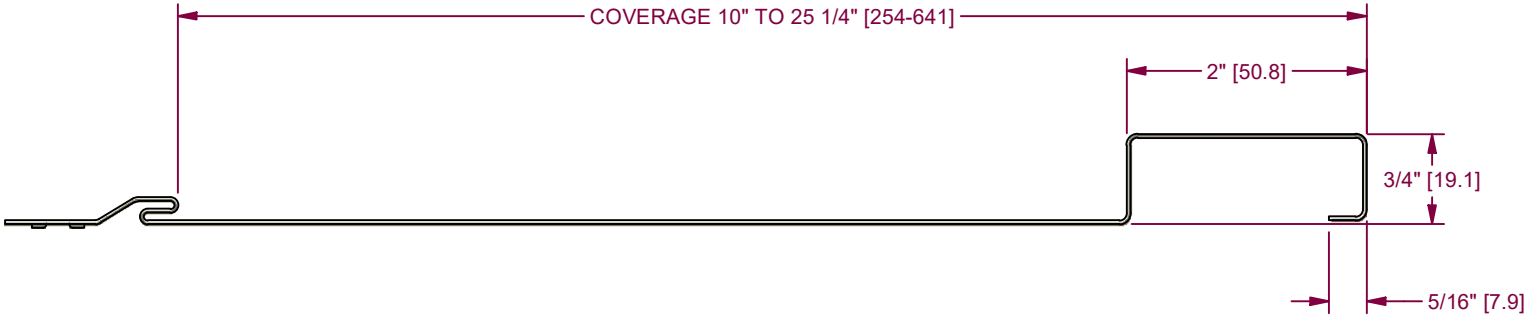

NOTES:

1. MATERIAL USAGE = 3 5/8" APPROX.

2. MATERIALS FORMED:
   - 26GA AND 24GA GRADE 50 STEEL
   - .027" AND .032" ALUMINUM

3. DIMENSIONS IN BRACKETS ARE mm AND ARE PROVIDED FOR REFERENCE ONLY.

1 ADDED DUAL DIMENSIONS
UPDATED SLOT WIDTH
VERIFIED MATERIALS

MATERIAL: SEE NOTE

FINISH:

REVISION HISTORY

REV	ECR NO.	DATE	RELEASED BY
1	NONE	2/28/2023	AJB

TOLERANCES
.XX = ± .01
.XXX = ± .005
FRACTION = ± 1/32"
ANGLE = ± 1/2°

New Tech Machinery
A MAZZELLA COMPANY

DRAWN BY: AJB
ECR NO.: NONE
RELEASED BY: AJB
RELEASE DATE: 9/13/2022

PART NAME: BOARD AND BATTEN PROFILE

PART NUMBER: BB7-750P

SHEET: 1 OF 1

REVISION: 1